Eurographics Conference on Visualization (EuroVis) (2014)
N. Elmqvist, M. Hlawitschka, and J. Kennedy (Editors)

Extracting Jacobi Structures in Reeb Spaces

Amit Chattopadhyay[1], Hamish Carr[1], David Duke[1] and Zhao Geng[1]

[1]School of Computing, University of Leeds, UK

Abstract

Jacobi sets have been identified as significant in multi-field topological analysis, but are defined in the domain of the data rather than in the Reeb Space. This distinction is significant, as exploiting multi-field topology actually depends on the projection of the Jacobi set into the Reeb Space, and the details of its internal structure. We therefore introduce the Jacobi Structure of a Reeb Space which describes this, explain its relationships with both the Jacobi Set and Fiber Analysis in mathematical topology, give an algorithm for computing the Jacobi Structure recursively using a Multi-Dimensional Reeb Graph and illustrate it using an early implementation in VTK.

Keywords: Topological analysis, Multi-Field, Reeb space, Jacobi set, Multi-Dimensional Reeb Graph, JCN

Categories and Subject Descriptors (according to ACM CCS): I.3.6 [Computer Graphics]: Methodology and Techniques—Graphics data structures and data types

1. Introduction

Much of the data that appear in scientific experiments and simulations are multivariate in nature and involve multiple scalar fields. Topological analysis of such data aims to reveal interesting features useful to the domain scientists. Until now, multi-field topological analysis is primarily based on Jacobi sets - a generalization of critical features in domains of multi-fields [EH04, EHNP04, BBD*07, NN09]. Although a Reeb space structure has been introduced as an extension of the Reeb graph for capturing the multi-field topology [EHP08], there is a lack of efficient data-structure and algorithm for computing Reeb spaces in practical applications. Unlike the Reeb graph, the Reeb space structure is not simple, but it is quite predictable that the Reeb space is much more valuable than the Jacobi set for the multi-field topological analysis. Recently, a Joint Contour Net (JCN) graph structure has been proposed for approximating the Reeb space [CD13, DCS*12]. However, a clear relationship between the Jacobi set and the Reeb space is still missing and worth investigating for understanding the Reeb space.

In this article, we introduce a Jacobi Structure in the Reeb space which relates the Jacobi set with the Reeb space. The Jacobi structure is characterised as the projection of the Jacobi set in the Reeb space and captures the exact location of topological changes. Clearly, computing the Jacobi structures helps understanding the Reeb spaces and fiber-topology of multi-fields.

Contribution. In this article, we contribute as follows:

- We introduce the Jacobi structures as the critical features in Reeb spaces and relate them with the Jacobi sets and the singular fibers of multi-fields.
- We provide an efficient algorithm for computing the Jacobi structure by constructing a Multi-Dimensional Reeb Graph (MDRG) from the Joint Contour Net, itself a quantized approximation of the Reeb space.
- We report preliminary implementation results for simulated multi-field data sets, using the VTK library.

Outline. In the next section, we give a necessary background and an overview of the multi-field topology. In section 3, we describe our algorithm for computing the Jacobi structures in the Reeb spaces. Finally, section 4 shows some implementation results of the Jacobi structures from some simulated data and section 5 concludes with a summary.

2. Necessary Background

Over the last two decades, scalar topology has been used to support scientific data analysis and visualization, in particular through the use of the Reeb graph and its specialization, the contour tree [vKvOB*97, CSA03, HSKK01, EHMP04, PBMS07]. The subject of multi-field topology in the data analysis is rather new. In this section we briefly describe the multi-field topological analysis and the existing tools for capturing them, such as the Jacobi sets and the Reeb spaces. In the end, we introduce the Joint Contour Net data-structure that approximates the Reeb space.

© The Eurographics Association 2014.

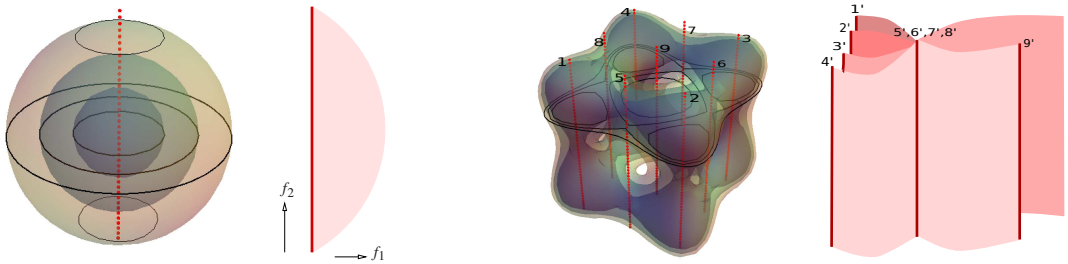

(a) (b) (c) (d)

Figure 1: (a) Jacobi set (red lines) and fibers (black curves) in the domain of a stable bivariate field $f = (x^2+y^2+z^2, z)$, (b) Corresponding Jacobi structure (red lines) in the Reeb space and of f, (c) Jacobi set (red lines) and fibers (black curves) in the domain of an unstable bivariate field $g = (x^4+y^4+z^4-5(x^2+y^2+z^2)+10, z)$, (d) Corresponding Jacobi structure (red lines) in the Reeb space and of g.

Multi-Field Analysis. A multi-field on $\mathbb{R}^d$ with r component scalar fields $f_i : \mathbb{R}^d \to \mathbb{R}$ $(i = 1, \ldots, r)$ is a *map* $f = (f_1, f_2, \ldots, f_r) : \mathbb{R}^d \to \mathbb{R}^r$. In differential topology, f is considered to be a *smooth map* where all its partial derivatives of any order are continuous. A point $\mathbf{x} \in \mathbb{R}^d$ is called a *singular point* (or *critical point*) of f if the rank of its differential $df_{\mathbf{x}}$ is less than $\min\{d, r\}$ where $df_{\mathbf{x}}$ is the $d \times r$ matrix whose columns are the gradients of f_1 to f_r at $\mathbf{x}$. And the corresponding value $f(\mathbf{x}) = \mathbf{c} = (c_1, c_2, \ldots, c_r)$ in $\mathbb{R}^r$ is a *singular value*, otherwise $\mathbf{x}$ is called a *regular point* and $f(\mathbf{x})$ is a *regular value*.

A *fiber* or a *level set* of a map corresponding to a value $\mathbf{c}$ is the inverse image $f^{-1}(\mathbf{c})$. The inverse image of a singular value is called a *singular fiber* and the inverse image of a regular value is called a *regular fiber*. If each fiber of a smooth map contains at most one singular point then it is called a *stable map*, otherwise if at least one fiber contains more than one singular point then the corresponding map is an *unstable map* [Sae04]. Figure 1a is an example of a stable map, as here each singular fiber is a singular point. Figure 1c is an example of a unstable map, because of the singular fibers which pass through four saddles.

From the pre-image theorem [GP74], generically a regular fiber $f^{-1}(\mathbf{c})$ is a $(d-r)$-manifold for the regular value $\mathbf{c}$. We note for $d < r$, $f^{-1}(\mathbf{c})$ is an empty set. Again a fiber $f^{-1}(\mathbf{c})$ can be considered as the intersection of the fibers of the component scalar fields $f_1^{-1}(c_1), f_2^{-1}(c_2), \ldots, f_r^{-1}(c_r)$ and a connected component of this intersection is called a *joint contour* [CD13]. Alternatively, the joint contours of $(f_1, f_2, \ldots, f_r)$ can be considered as the contours of a component field f_i, restricted to the joint contours of the remaining component fields. This is a *key idea* that we use in building our MDRG data-structure. Topology of the singular fibers and their complete classifications have been studied in the literature for smooth maps from $\mathbb{R}^3$ to $\mathbb{R}^2$ and from $\mathbb{R}^4$ to $\mathbb{R}^3$ [Sae04].

Jacobi Set. The Jacobi set $\mathbb{J}_f$ of a multi-field $f : \mathbb{R}^d \to \mathbb{R}^r$ is defined by the set $\mathbb{J}_f := \left\{ \mathbf{x} \in \mathbb{R}^d \mid \text{rank } df_x < \min\{d, r\} \right\}$ [EH04]. In otherwords, this is the set of singular points of the multi-field. An alternative way to describe the Jacobi set is by the set of critical points of one component field (say f_i) of f restricted to the intersection of the level sets of the remaining component fields. Edelsbrunner et al. studied properties of the Jacobi set for r Morse functions [EH04]. The Jacobi set is symmetric with respect to its component fields. Generically, the Jacobi set of two Morse functions is a smoothly embedded 1-manifold where the gradients of the functions become parallel. Although, in general Jacobi sets are not sub-manifolds of the domain of the multi-field f, but are the disjoint union of sub-manifolds of the domain [EH04]. The red dotted lines in Fig 1a and Fig 1c show the Jacobi sets of a stable and an unstable multi-field, respectively.

Reeb Space. As the Reeb graph of a scalar field, the Reeb space parametrizes the joint contours of a multi-field. In other words, each point in the Reeb space corresponds to a joint contour of the multi-field and vice versa. The Reeb space of a multi-field $f = (f_1, f_2, \ldots, f_r) : \mathbb{R}^d \to \mathbb{R}^r$ is denoted as $\mathcal{RS}[f_1, f_2, \ldots, f_r]$. Generically, when $r \leq d$ the Reeb space of f consists of a collection of r-manifolds glued together in complicated ways [EHP08]. Fig 1b and Fig 1d show two examples of the Reeb spaces corresponding to a stable and an unstable bivariate-fields, respectively. We indicate the dark (red) lines in the Reeb spaces, along which the regular sheets are glued, as the Jacobi structures and formally introduce them in the next section.

Joint Contour Net. The Joint Contour Net (JCN) [CD13, DCS*12] is a data structure that approximates the Reeb space of a Piecewise-Linear (PL) multi-field $f = (f_1, f_2, \ldots, f_r) : \mathbb{I} \subset \mathbb{R}^d \to \mathbb{R}^r$ in a d-dimensional interval (box) $\mathbb{I}$, and is denoted by $\mathcal{JCN}[f_1, f_2, \ldots, f_r]$. The idea of the JCN is based on the quantization of the level sets of the fields into discrete ones. A *quantized level set* of f_i at an isovalue $h \in \mathbb{Z}$ is denoted by $Qf_i^{-1}(h)$ and is defined as: $Qf_i^{-1}(h) := \{x \in M : round(f_i(x)) = h\}$. A connected component of the quantized level set in the mesh is called a *quantized contour* or a *contour slab*. The part of the contour slab in a single cell of the mesh is called a *contour fragment*. Now the first step of the JCN algorithm constructs all the contour fragments corresponding to a quantization of each component field. In the second step, the *joint contour fragments* are computed by computing the intersections of these contour fragments for the component fields in a cell. The third step is to construct an adjacency graph of these joint contour fragments, a node in the graph corresponds to a joint contour

© The Eurographics Association 2014.

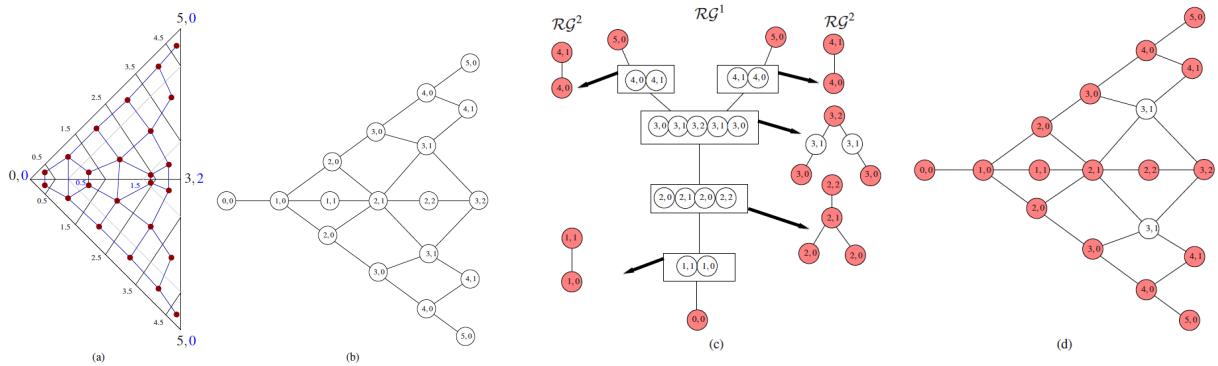

Figure 2: (a) The joint contour fragments and their adjacency graph corresponding to the PL-bivariate field defined by the values $\{(5,0),(0,0),(5,0),(3,2)\}$ at the vertices of a mesh of two triangles. (b) Corresponding Joint Contour Net. (c) The Multi-Dimensional Reeb Graph constructed from the JCN. The critical nodes of the MDRG are the 'red' nodes which form the Jacobi structure. (d) JCN showing the Jacobi structure (red).

fragment and there is an edge between two nodes if the corresponding joint contour fragments are adjacent (i.e. if they share a $(d-1)$-face). Finally, the JCN is obtained by collapsing the neighbouring redundant nodes with identical isovalues. In otherwords, each node in the JCN corresponds to a *joint contour slab*. A demo of the JCN construction is given in Figure 2(a)-(b). In the limit, for arbitrarily large quantization level the JCN converges to the corresponding Reeb space [CD13].

3. Our Method

In this section, first we define a Jacobi structure in the Reeb space. Then we give an algorithm for computing the Jacobi structure for a PL multi-field $f := (f_1, f_2, \ldots, f_r) : \mathbb{I} \subset \mathbb{R}^d \to \mathbb{R}^r$, using the JCN. In the process we also build a new Multi-Dimensional Reeb Graph data-structure.

Definition 3.1 The *Jacobi Structure* of a Reeb space corresponding to a multi-field is defined as the projection of its Jacobi set from the domain to the Reeb space. Alternatively, the Jacobi structure is the set of points in the Reeb space that parametrizes the singular fibers of the multi-field.

Figure 1a-1b and 1c-1d show the correspondence between the components of the Jacobi set and the Jacobi Structure. Our method for computing the Jacobi structure of a PL multi-field $(f_1, f_2, \ldots, f_r)$ can be described in three steps:

1. Compute the JCN of the multi-field as an approximation of its Reeb space (as demonstrated by Figure 2(a)-(b)),
2. Construct a Multi-Dimensional Reeb Graph (MDRG) from the JCN (as demonstrated by Figure 2(c)),
3. Finally, detect the Jacobi structure in JCN as the critical nodes of the MDRG (as demonstrated by Figure 2(d)).

The first step - computation of the JCN - has already been outlined in the last section. Next we describe the construction of the MDRG structure which is the core of our method.

The Multi-Dimensional Reeb Graph

The MDRG gives a new hierarchical (tree) structure for packing the joint contours of the component fields corresponding to a multi-field $(f_1, f_2, \ldots, f_r)$. Each dimension (or hierarchy or level) of the MDRG incrementally adds a new component field to form the joint contours of that dimension. In the first dimension, it packs the contours of the component f_1. In the second dimension, it packs the joint contours of (f_1, f_2) (alternatively, the contours of f_2, restricted to the contours of f_1). In the third hierarchy, it packs the joint contours of (f_1, f_2, f_3) (alternatively, the contours of f_3, restricted to the joint contours of (f_1, f_2)). And this is continued until the r-th dimension to obtain a r-dimensional MDRG of f. Now to pack the joint contours at each dimension, the MDRG stores the corresponding Reeb graphs, recursively. That is, in the first dimension it stores the Reeb graph (or contour tree in case of a simple domain) of f_1. In the second dimension, it stores the Reeb graphs of f_2, restricted to the contours of f_1. In the third dimension, it stores the Reeb graphs of f_3, restricted to the joint contours of (f_1, f_2) and so on.

In Figure 2(c), we show an example of the MDRG, constructed from the JCN of a PL bivariate field, i.e. for $r = 2$. First we extract the Reeb graph (contour tree, in this example) from the JCN with respect to the field f_1 (the algorithm is discussed later). This Reeb graph is denoted by $\mathcal{RG}^1$ and is packed in the first dimension of the MDRG. Note that each node (vertex) of $\mathcal{RG}^1$ corresponds to a contour slab of f_1 and is a collection of nodes in the JCN with same f_1-value. Let $\mathcal{RG}^1$ has n vertices $v_1, v_2, \ldots, v_n$. Next corresponding to each vertex of $\mathcal{RG}^1$ again we construct a Reeb graph with respect to field f_2. These Reeb graphs are denoted as $\mathcal{RG}^2_1, \mathcal{RG}^2_2, \ldots, \mathcal{RG}^2_n$ and are packed in the second-dimension of the MDRG (collectively, denoted as $\mathcal{RG}^2$ in Figure 2(c)). For number of fields $r > 2$ this procedure is continued, recursively, to obtain a r-dimensional MDRG.

Definition 3.2 The *critical nodes of a MDRG* corresponding to a multi-field $(f_1, f_2, \ldots, f_r)$ are given by the critical nodes of the Reeb graphs in the r-th dimension of the MDRG.

Note, a node of a Reeb graph is *critical* if either of its in-degree or outdegree is not one. Thus from the construction, the critical nodes of the MDRG correspond to the singular

© The Eurographics Association 2014.

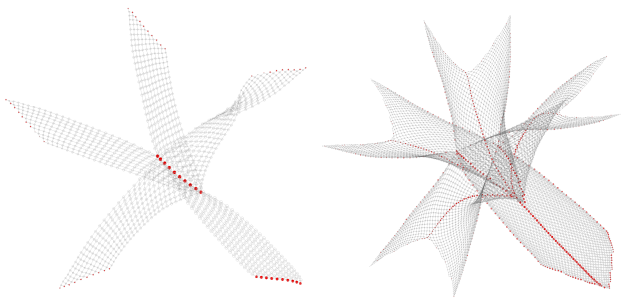

(a) (b)

Figure 3: The Jacobi structures (shown in red color in JCN) of the bivariate fields: (a) (Parab, Height), (b) (Parab, Sphere).

fibers of the multi-fields and in the Reeb space they form the Jacobi structure. Thus we have the following lemma.

Lemma 3.1 (Convergence) In the limiting case, when the quantization level increases, the set of critical nodes of the MDRG computed from a JCN converges to the accurate Jacobi structure of the Reeb space.

Algorithm 1 CreateReebGraph(G, f_i)

Input: A subgraph G of JCN and a chosen field f_i
Output: The Reeb Graph RG with respect to field f_i

```
Create Union-Find Structure UF for field f_i.
For each adjacent g_1, g_2 ∈ G with f_i(g_1) = f_i(g_2), UFAdd(g_1, g_2)
for each component C_i in UF do
    Create a node n_{C_i} in RG
    Map graph node-id(s) and field-values from G to n_{C_i}
end for
Order nodes n_{C_1}, ..., n_{C_m} according to f_i field values.
for edge e_1 e_2 in G do
    if e_1, e_2 ∈ components C_j ≠ C_k and f_i(e_1) ≠ f_i(e_2) then
        Add edge e(n_{C_i}, n_{C_j}) in RG if not already present
    end if
end for
return RG
```

Algorithm. The algorithm for constructing the MDRG from an input JCN outputs a tree data-structure, with each level storing the Reeb graphs of that dimension. We start with the JCN and compute the Reeb Graph for property f_1 by performing union-find (UF) processing over the nodes of the JCN. This breaks the JCN into subgraphs corresponding to slabs in the Reeb Graph of property f_1. The MDRG for each subgraph is then computed recursively, and stored in the node of the parent Reeb Graph to which its slab corresponds. In the process, the slabs get separated out into smaller and smaller components. The Reeb graph computation for a subgraph G of JCN and a chosen field f_i is shown in Algorithm 1. The complexity of the CreateReebGraph on a graph with n nodes is $O(n + p \log N)$ which is the complexity of a sequence of p UF operations (here, $p \leq n$) [Tar75].

Table 1: Performance results for some simulated datasets

datasets	data-dims	slab wdths	nr-nds (JCN)	nr-nds (MDRG)	time (JCN)	time (MDRG)
(Circle, Line)	(29, 29, 1)	(1, 1)	500	35	0.12s	0.06s
(Parab, Height)	(40, 40, 40)	(1, 1)	1260	11	131.50s	0.10s
(Sphere, Height)	(40, 40, 40)	(1, 1)	1308	251	151.24s	0.22s
(Parab, Sphere)	(40, 40, 40)	(1, 1)	6554	251	312.64s	0.80s
(Cubic, Height)	(40, 40, 40)	(1, 1)	3149	365	360.26s	0.50s

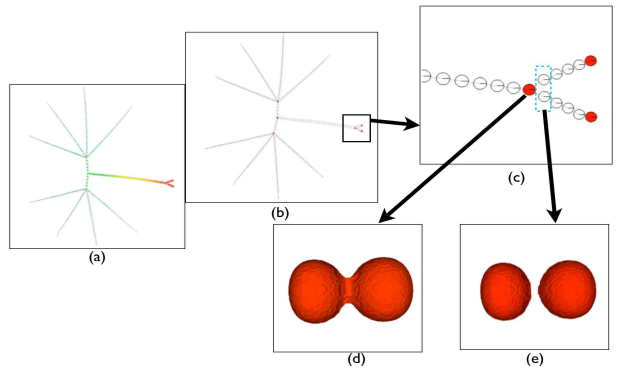

Figure 4: (a) JCN of the nuclear scission data (b) Jacobi Structure ('red' nodes) (c) Selected components of the Jacobi Structure (d) Corresponding critical feature in the domain (e) Topological change at the Jacobi component–Nuclear Scission.

4. Implementation

We implement our algorithm of computing the Jacobi structures using the Visualization Toolkit (VTK) [vtk] and an Open Graph Drawing Framework (OGDF) [ogd]. To justify the correctness of the algorithm, the algorithm is tested on simulated data generated from known functions - Circle: $x^2 + y^2$, Line: y, Sphere: $x^2 + y^2 + z^2$, Parab: $x^2 + y^2 - z$, Height: z and Cubic: $y^3 - xy + z^2$. Circle and Line data are in $[-5, 5]^2$ and other data are considered in $[-5, 5]^3$. Figure 3 shows the extracted Jacobi structures (red nodes) of the bivariate fields: (Parab, Height) and (Parab, Sphere). The Jacobi structures in the figures are clearly showing the exact locations of the topological changes in the corresponding JCN. The size of each JCN node corresponds to the size of the joint contour slab in the geometric domain.

We also apply our algorithm on a real density data of protons and neutrons in the nucleus (see [DCS*12] for the data details) and detect the 'exact' location of the nuclear scission point - a topological feature where one nucleus fragments into two. This is shown in Figure 4(a)-(e).

Performance results. Table 1 shows performance results of the JCN and the MDRG implementations. All timings were performed on a 3.06 GHz 6-Core Intel Xeon with 64GB memory, running OSX 10.8.5, and using VTK 5.10.1.

5. Conclusion

In this article, we introduce a new Jacobi structure in the Reeb space which is important for detecting the exact location of topological changes in the multi-field data. We have also proposed a new data-structure and an algorithm for computing the Jacobi structures corresponding to general PL multi-fields.

© The Eurographics Association 2014.

Acknowledgments

The first author of the paper thanks Daisuke Sakurai and Shigeo Takahashi for their feedback during constructing the examples of the Reeb spaces in the Background section.

References

[BBD*07] BREMER P.-T., BRINGA E. M., DUCHAINEAU M., LANEY D., MASCARENHAS A., PASCUCCI V.: Topological feature extraction and tracking. *Journal of Physics: Conference Series 78:012007* (2007). 1

[CD13] CARR H., DUKE D.: Joint Contour Net. *IEEE Transactions on Visualization and Computer Graphics* (2013), xxx–xxx. accepted. 1, 2, 3

[CSA03] CARR H., SNOEYINK J., AXEN U.: Computing Contour Trees in All Dimensions. *Computational Geometry: Theory and Applications 24*, 2 (2003), 75–94. 1

[DCS*12] DUKE D., CARR H., SCHUNCK N., NAM H. A., STASZCZAK A.: Visualizing nuclear scission through a multifield extension of topological analysis. *IEEE Transactions on Visualization and Computer Graphics 18*, 12 (2012), 2033–2040. 1, 2, 4

[EH04] EDELSBRUNNER H., HARER J.: Jacobi Sets of Multiple Morse Functions. *In Foundations of Computational Matematics, Minneapolis, 2002* (2004), 37–57. Cambridge Univ. Press, 2004. 1, 2

[EHMP04] EDELSBRUNNER H., HARER J., MASCARENHAS A., PASCUCCI V.: Time-varying Reeb Graphs for Continuous Space-Time Data. In *Symposium on Computational Geometry* (2004), pp. 366–372. 1

[EHNP04] EDELSBRUNNER H., HARER J., NATARAJAN V., PASCUCCI V.: Local and Global Comparison of Continuous Functions. In *Proceedings of the conference on Visualization* (2004), pp. 275–280. 1

[EHP08] EDELSBRUNNER H., HARER J., PATEL A. K.: Reeb Spaces of Piecewise Linear Mappings. In *SoCG* (2008). 1, 2

[GP74] GUILLEMIN V., POLLACK A.: *Differential Topology*. Prentice-Hall, Inc., Englewood Cliffs, New Jersey, 1974. 2

[HSKK01] HILAGA M., SHINAGAWA Y., KOHMURA T., KUNII T. L.: Topology Matching for Fully Automatic Similarity Estimation of 3D Shapes. In *SIGGRAPH* (2001), pp. 203–212. 1

[NN09] NATARAJAN S., NATARAJAN V.: Simplification of jacobi sets. In *TopoInVis* (2009). 1

[ogd] `OGDF - Open Graph Drawing Framework.` `http://www.ogdf.net/`. 4

[PBMS07] PASCUCCI V., BREMER P.-T., MASCARENHAS A., SCORZELLI G.: Robust On-line Computation of Reeb Graphs. *ACM Transactions on Graphics (TOG) 26*, 58 (July 2007). 1

[Sae04] SAEKI O.: *Topology of Singular Fibers of Differentiable Maps*. Springer, 2004. 2

[Tar75] TARJAN R. E.: Efficiency of a Good but Not Linear Set Union Algorithm. *Journal of ACM 22* (1975), 215–225. 4

[vKvOB*97] VAN KREVELD M., VAN OOSTRUM R., BAJAJ C., PASCUCCI V., SCHIKORE D.: Contour Trees and Small Seed Sets for Isosurface Traversal. In *Symposium on Computational Geometry* (1997), pp. 212–220. 1

[vtk] `Visualization Toolkit.` `http://www.vtk.org/`. 4

© The Eurographics Association 2014.